Modeling for Robot-Driven Prototype Automation

Manussawee Piyaneeranart
Faculty of Information Technology, ITMRC
King Mongkuts University of Technology North Bangkok
Bangkok,Thailand
s5907011910045@email.kmutnb.ac.th

Mahasak Ketcham
Faculty of Information Technology, ITMRC
King Mongkuts University of Technology North Bangkok
Bangkok, Thailand
mahasak.k@it.kmutnb.ac.th

***Abstract*—In the past, researchers have thought that automating robots is a far. Some researchers believe that if a better program is developed with a robot that can automatically move the robot. Nowadays, various researchers have developed robots that can be automated and applied to many tasks. This research has developed an automated robot model. The robot can move in the lane prepared in the laboratory and predict the direction accurately. The movement of the robot is moving in the right lane, representing about 72%.**

***Index Terms*—Robot, Autonomous, Vehicle**

I. Introduction

In the past, researchers were amazed at the computational power of computers, thinking that if they were writing the right applications, the computer could become the brain of the artificial autonomous robot. At that time, the researchers found that was a distant subject. Although that was in the 1950s [1] robots were used in the automobile industry and other products. The scientists believe in the future, robots are developed to move freely and have intellectual capabilities such as humans.

Later, robots were developed and developed to help people in their jobs. [2] For example, in Asia, robots are developed for the elderly. The United States has developed robots to work with humans and as human assistants in everyday life. Kinect camera technology to help detect motion and transform into a 3D image to help detect the face. The researchers have conceptualized robots based on the infrastructure of Cloud Computing to access data and have more processing power. This way, some of which is called cloud robotics helps robots reduce the workload required for computing such as image processing and speech recognition.

In addition, robots are used to guide human beings by moving their robots freely. [3] The interaction between humans and robots leads to research that encompasses both robot capabilities and receptivity. Learn the basics of learning, managing, and navigating. Human Robot Interaction: The HRI makes it possible for robots to move their positions to different locations to direct humans, such as navigating human beings to apartment rooms. The robot moves at the speed that humans can walk.

The interaction between robots and humans is the development of robotic motion. It can be used to track or detect the target itself. Technological advances make robots smaller in size and cost. The system consists of a number of robots that work together called robot swarms. [4] The major advantage of robot swarms is that they are resistant to each robot failure and can be upgraded. In addition, Multi-Robot [5-7] can function independently without coordinating with other robots. Can be used in many areas such as robots search for victims.

From the above. Researchers have proposed methods and algorithms to provide robots with automated systems. The research presents the development of prototype robots and algorithms used to drive automation with embedded deep learning.

II. Related Work

A. Robot

A robot is a machine with an internal mechanism. Works with humans or work instead of humans beings and can be prioritized or postponed. The robots are classified into two types, depending on the type of operation: fixed type robots and mobile robots.

a) fixed type robots: Mostly industrial robots are used instead of human labor for 24 hours of continuous work, repetitive tasks, hazardous jobs, hard work, and hard labor.

b) mobile robots: Mostly horizontal robots can be controlled from a distance. Equipment used for moving wheels or rails. Currently, the legs are used with robots.

c) Autonomous robots: Automated robots are robots that can operate on their own. There are programs entered into the memory of the robot.

B. Use robots to exploit

Automated robots are used in a variety of applications, including road storage, security, such as patrolling, Target Detection, Target Tracking.

a) Road Dataset: Robots are used to learn the structural characteristics of roads in an unstructured manner, with no lane markings, and with dense shadows [10] or roads in semi-structured environments. [11] In addition, it is used to visualize the area to be used to create a street scene, which records the area during driving. [12] Various techniques are used, such as the End-to-End [13] platform, using algorithms. Convolutional Neural Network (CNN) to record road characteristics. End-to-end research has been used as a basis for a model of brain inspired cognitive model with attention (CMA) [14] to analyze the relationship between complex traffic and recurrent neural networks.

b) Robots are used in security: Implementing robots for security [15] has been used in patrols to detect individuals and objects both inside and outside the building. [16] In addition, robots can be used for internal patrols to monitor, detect, and count persons entering the building. [17]

III. Methodology

This section discusses the modeling process for automated robots. There are 4 steps: Prepare Environment, Collect Dataset, Label and Train Model shown in figure 1.

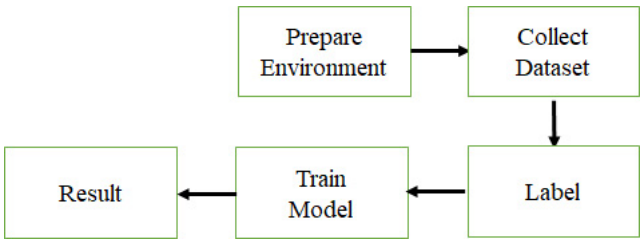

Fig. 1: Steps to prepare the robot automatically

A. Prepare Environment

This step is to prepare the environment by building a traffic lane in the lab. White lines are the border of the lane and the yellow dashed line is the divided lane. Traffic splice width 55 cm.

Fig. 2: Traffic lines are made in the lab

B. Image conversion

Bring the RGB color image to a gray level before executing label as shown in figure 3.

The equation is as follows.

$$Grayscaleimage = (W_1 * R) + (W_2 * G) + (W_3 * B) \quad (1)$$

where

W_1+W_2+W_3 and W_1,W_2,W_3 ¿ 0

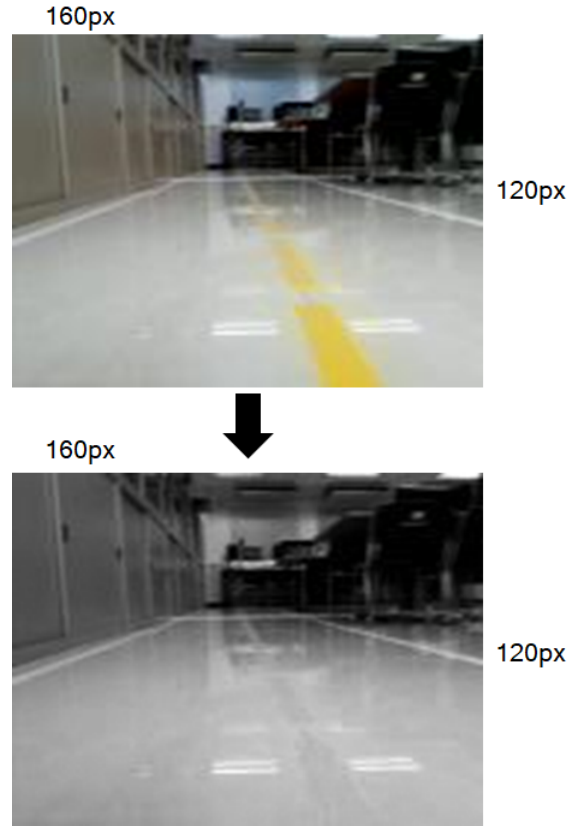

Fig. 3: Convert RGB image to Grayscale image.

R is red at the desired point and W_1 is the weight of red.

G is green at the desired point and W_2 is the weight of green.

B is blue at the desired point and W_3 is the weight of blue.

C. Collect Dataset

Dataset data includes rotation direction of wheel and speed. The image used in the train is approximately 120,000 images shown in Figure 4.

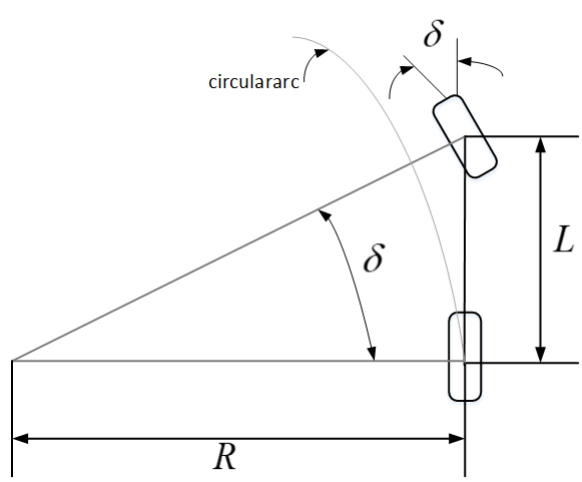

Fig. 4: Traffic lane dataset.

The direction of motion of the wheel is coordinated in vector (x, y, h). Where x, y is the position of the center of gravity, and h is the direction of the vehicle. Shown in figure 5.

Fig. 5: Wheel motion model.

D. Labeling

The information used in the label is the image of degrees and speed as follow table I and II.

- The images used include straight direction, left turn direction, and right turn direction.
- The angle is the angle of the wheel.
- Speed is in the range of 0 - 100%. In this study, the speed was 70-80%

TABLE I: The data set used in the training.

Image array	Throttle	Angle
	0.057	0.0207
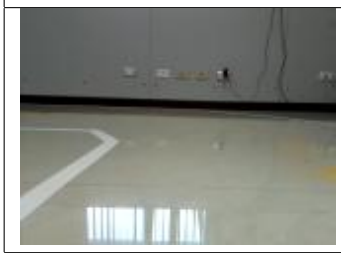	0.057	0.0207
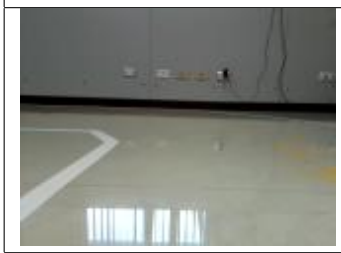	0.057	0.0207

TABLE II: The data set used in the training.

Image array	Throttle	Angle
	0.6697	0.1920
	0.6697	0.1920
	0.7684	0.2387
	0.7684	0.2387
	0.2024	-0.1505
	0.2024	-0.1505
	0.7632	-0.5034

TABLE III: The data set used in the training.

Image array	Throttle	Angle	Image	Throttle	Angle
	0.29	0.0259		0.244	-0.0207
	0.291	0.0259		0.8	0.0726
	0.8	0.062		0.8	0.0934
	0.244	-0.0207		0.8	0.0934
	0.244	-0.0207		0.8	0.0934
	0.244	-0.0207		0	0

E. Train Model

In the training model, the lane data set was used for approximately 120,000 images with the following steps.

- Grayscale image is used to train the model.
- Converts 2D array of gray-scale images into 1-dimensional array.
- Multilayer Perceptron Neural Network Algorithm is used as a tool. The data for Training is 70% and the 30% for Testing has the following equation:

$$y_i = f\left(\sum_j w_{ji}^{(1)} f\left(\sum_k w_{kj}^{(2))} x_k\right)\right) \tag{2}$$

Where

f is a sigmoid transfer function used by neurons.

$w_{kj}^{(2)}, w_{ji}^{(1)}$ is a link that leads into the hidden layer and the output respectively.

x_k is the attribute value of the presentation.

The Training Model consists of image data, lane degrees, and speed of movement. The results for the training of model was 67.81%.

IV. Experimental and Result

This experiment is a test of a model obtained from a collection of 120,000 images to produce a dataset. The first step is to convert the RGB color level to grayscale. Next, take the picture in the forward direction, turn left and turn right. Then, the dataset was used to train model and test.

The model was tested to allow the robot to move automatically. In between robots, the robot receives the image and provides the processing model to predict the direction of movement. The forecasts are both accurate and inaccurate.

A. Accurate predictions

The correct predictive direction of model movement. This experiment is an experiment to predict the direction of movement of the robot in the left turn direction. This experiment shows the results of experiments in Figure 6-8.

B. Incorrect predictions

The incorrect predictive direction of model movement. This experiment is a false prophecy in the wrong direction. This experiment is a direct movement, but the movement of the car does not move in the direct direction. The results are shown in Figure 9.

V. Conclusion

This research presents models for use with robots to automatically drive them. The lane traffic image was prepared in the laboratory. The stored image will be used as a dataset for the robot. The collected dataset is 160x120px in 40,000 RGB images. Before being used in the train model, take the image into the preparation stage, converting the RGB image to a Grayscale image. Then take the Grayscale image. Model training with MLP algorithm. Models for use with robots

Fig. 6: Forecasting in the left direction.

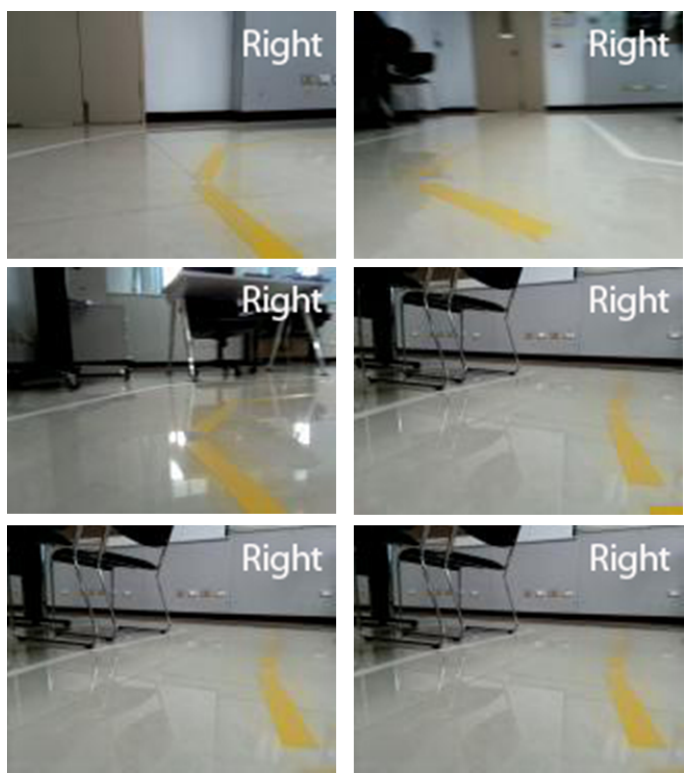

Fig. 7: Forecasting in the right direction.

Fig. 8: Forecasting in the forward direction.

Fig. 9: Incorrect forecast

can be automatically driven. When the model was tested, the movement of the robot is moving in the right lane, representing about 72%. There are some inaccuracies, about 27 %. In order to make the movement of the robot traffic more accurate, the lane detection feature should be added to enhance the robot's ability to perform future work.

References

[1] H. Moravec, "Rise of the Robots," SCIENTIFIC AMERICAN-AMERICAN EDITION-, vol. 281, pp. 124-135, 1999.

[2] E. Guizzo and T. Deyle, "Robotics trends for 2012," IEEE Robotics & Automation Magazine, vol. 19, no. 1, pp. 119-123, 2012.

[3] T. Kruse, A. K. Pandey, R. Alami, and A. Kirsch, "Human-aware robot navigation: A survey," Robotics and Autonomous Systems, vol. 61, no. 12, pp. 1726-1743, 2013.

[4] A. Kolling, P. Walker, N. Chakraborty, K. Sycara, and M. Lewis, "Human interaction with robot swarms: A survey," IEEE Transactions on Human-Machine Systems, vol. 46, no. 1, pp. 9-26, 2016.

[5] A. Farinelli, L. Iocchi, and D. Nardi, "Multirobot systems: a classification focused on coordination," IEEE Transactions on Systems, Man, and Cybernetics, Part B (Cybernetics), vol. 34, no. 5, pp. 2015-2028, 2004.

[6] L. E. Parker, "Multiple mobile robot systems," in Springer Handbook of Robotics: Springer, 2008, pp. 921-941.

[7] M. Lewis, "Human interaction with multiple remote robots," Reviews of Human Factors and Ergonomics, vol. 9, no. 1, pp. 131-174, 2013.

[8] Saranukromthai. (2011). vol. 36, no. 6.

[9] Q. Gao, Q. Luo, and S. Moli, "Rough set based unstructured road detection through feature learning," in Automation and Logistics, 2007 IEEE International Conference on, 2007, pp. 101-106: IEEE.

[10] A. Di Fava, M. Satler, and P. Tripicchio, "Visual navigation of mobile robots for autonomous patrolling of indoor and outdoor areas," in Control and Automation (MED), 2015 23th Mediterranean Conference on, 2015, pp. 667-674: IEEE.

[11] Y. Zhang et al., "Optimized 3D Street Scene Reconstruction from Driving Recorder Images," Remote Sensing, vol. 7, no. 7, pp. 9091-9121, 2015.

[12] M. Bojarski et al., "End to end learning for self-driving cars," arXiv preprint arXiv:1604.07316, 2016.

[13] S. Chen, S. Zhang, J. Shang, B. Chen, and N. Zheng, "Brain-inspired Cognitive Model with Attention for Self-Driving Cars," IEEE Transactions on Cognitive and Developmental Systems, vol. PP, no. 99, pp. 1-1, 2017.

[14] Y. Choe and M. J. Chung, "System and software architecture for autonomous surveillance robots in urban environments," in Ubiquitous Robots and Ambient Intelligence (URAI), 2012 9th International Conference on, 2012, pp. 535-536: IEEE.

[15] A. M. Pinto, P. G. Costa, and A. P. Moreira, "An architecture for visual motion perception of a surveillance-based autonomous robot," in Autonomous Robot Systems and Competitions (ICARSC), 2014 IEEE International Conference on, 2014, pp. 205-211: IEEE.

[16] H. Guo, S. Cai, X. Wu, Q. Wu, W. Feng, and Q. Gao, "Running person detection from a community patrol robot," in Information and Automation (ICIA), 2016 IEEE International Conference on, 2016, pp. 1521-1525: IEEE.

[17] S. Hoshino and S. Ugajin, "Adaptive patrolling by mobile robot for changing visitor trends," in Intelligent Robots and Systems (IROS), 2016 IEEE/RSJ International Conference on, 2016, pp. 104-110: IEEE.